CONFIDENTIAL THIS DOCUMENT/PROGRAM, INCLUDING THE CONTENT, IS PROPERTY OF FISHER CONTROLS INTERNATIONAL LLC AND MUST BE HELD IN STRICT CONFIDENCE AND PROPERLY SAFEGUARDED BY THE RECIPIENT AT ALL TIMES, IT MAY NOT BE COPIED OR REPRODUCED, OR PROVIDED OR REVEALED TO ANY OTHER PARTY, EXCEPT WITH PRIOR WRITTEN AUTHORIZATION OF AN APPROPRIATE OFFICER OF FISHER CONTROLS INTERNATIONAL LLC AND ANY AUTHORIZED COPY OR REPRODUCTION MUST INCLUDE THIS ADMONITION. THE RECIPIENT MAY USE THE SAME ONLY FOR THE PURPOSE FOR WHICH FISHER CONTROLS INTERNATIONAL LLC HAS PROVIDED IT TO THE RECIPIENT. THE AUTHORIZED COPY OR REPRODUCTION DOCUMENT MUST BE RETURNED TO FISHER CONTROLS INTERNATIONAL LLC UPON REQUEST. BY ACCEPTING THIS DOCUMENT/PROGRAM, THE RECIPIENT AGREES TO THE FOREGOING.

CONTROLLED COPY
B.NO START - 1 B.NO END - 9

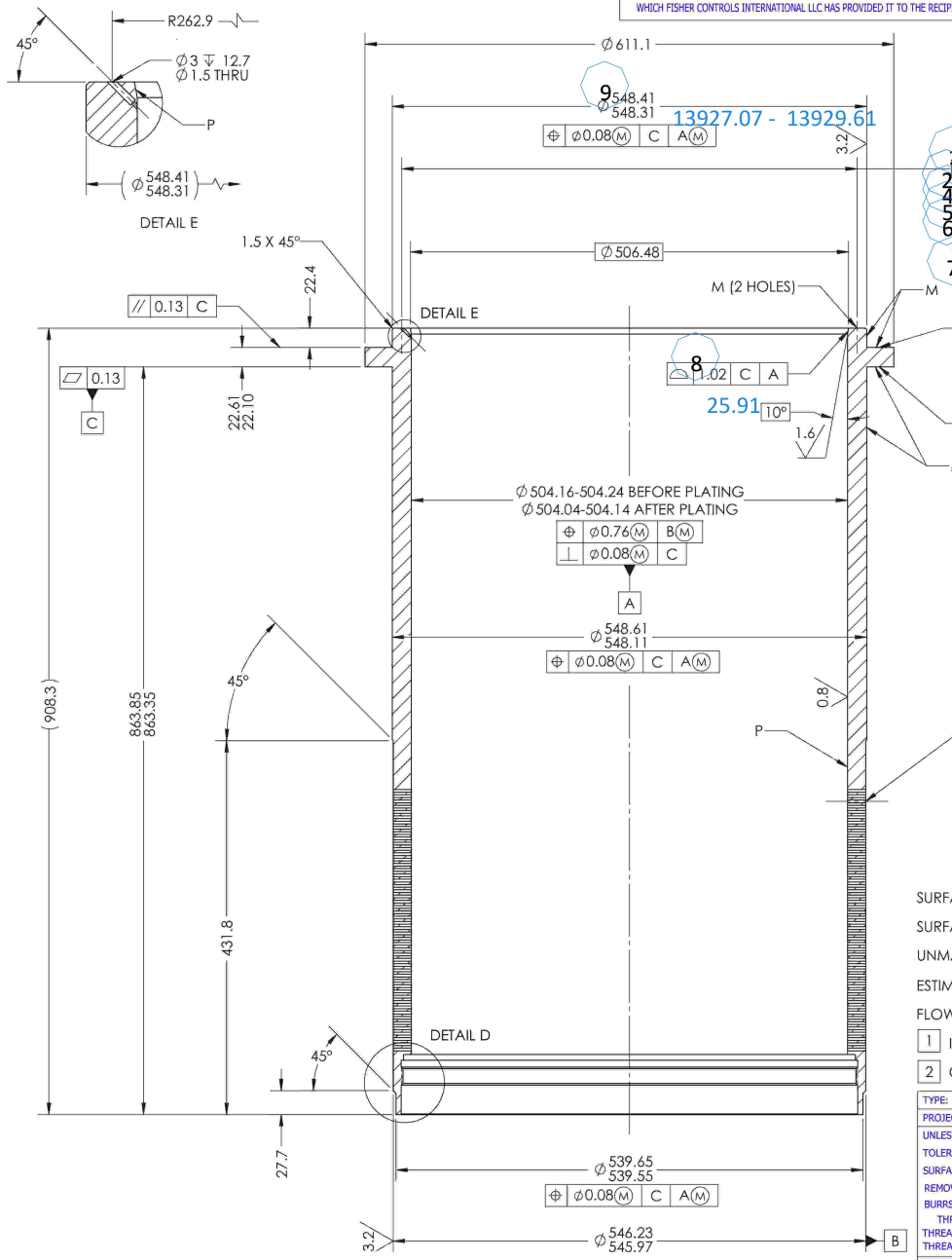

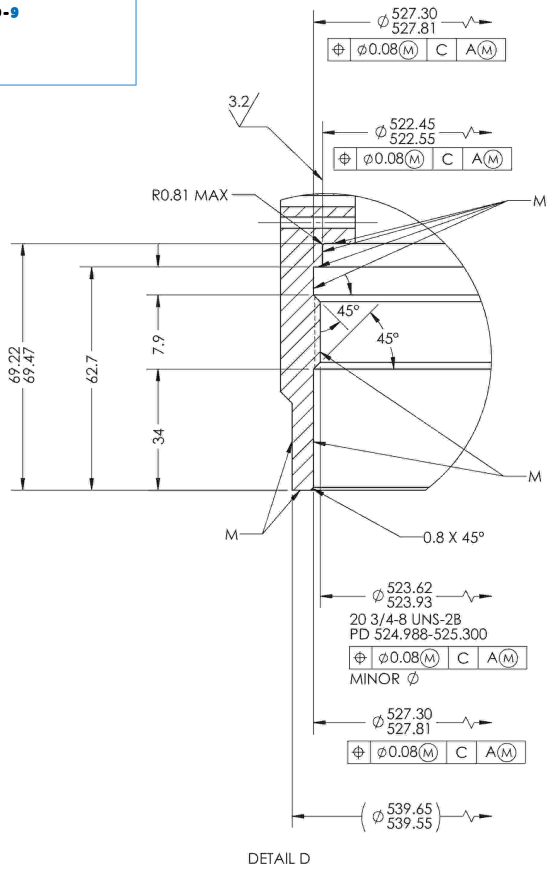

SURFACES MARKED P REQUIRE PLATING

SURFACES MARKED M REQUIRE MASKING

UNMARKED SURFACES NEED NOT BE MASKED

ESTIMATED WEIGHT: 254 KG

FLOW AREA: 1222.8 SQ CM

1 INCREASED/DECREASED ANGLE ALLOWED AT 90° INCREMENTS

2 CHORD LENGTH (11)

TYPE: ET	CAGE, WHISPER III, LEVEL A1, PLATED, BI DIRECTIONAL		
PROJECT NO.:	SIZE 20 & 24, CL600, 19.75 PORT, 11.88 TVL		
UNLESS OTHERWISE SPECIFIED TOLERANCE ± 0.5 ∠± 3 ° SURFACE FINISH 6.3 Ra REMOVE SHARP CORNERS AND BURRS 0.81 RADIUS OR CHAMFER MAX THREAD DRILL ↧ IS MAX THREAD LENGTH IS FULL THREAD THREADED FEATURES PER ASME B1.1-2019	PLATE AS SHOWN 0.051-0.064 THICK CNTFGL CSTG: 47B6053	EMERSON ECRN:	DWN Niu, Yunpeng 14 Nov 2023 CHKD He, Helena 30 Nov 2023 APVD Faas, Daniel J 11 Dec 2023
UNITS: MILLIMETERS	© 2023 FISHER CONTROLS INTL. LLC		ASME Y14.5-2009 SHEET 1 OF 2 REV GK02877 A

CONFIDENTIAL THIS DOCUMENT/PROGRAM, INCLUDING THE CONTENT, IS PROPERTY OF FISHER CONTROLS INTERNATIONAL LLC AND MUST BE HELD IN STRICT CONFIDENCE AND PROPERLY SAFEGUARDED BY THE RECIPIENT AT ALL TIMES, IT MAY NOT BE COPIED OR REPRODUCED, OR PROVIDED OR REVEALED TO ANY OTHER PARTY, EXCEPT WITH PRIOR WRITTEN AUTHORIZATION OF AN APPROPRIATE OFFICER OF FISHER CONTROLS INTERNATIONAL LLC AND ANY AUTHORIZED COPY OR REPRODUCTION MUST INCLUDE THIS ADMONITION. THE RECIPIENT MAY USE THE SAME ONLY FOR THE PURPOSE FOR WHICH FISHER CONTROLS INTERNATIONAL LLC HAS PROVIDED IT TO THE RECIPIENT. THE AUTHORIZED COPY OR REPRODUCTION DOCUMENT MUST BE RETURNED TO FISHER CONTROLS INTERNATIONAL LLC UPON REQUEST. BY ACCEPTING THIS DOCUMENT/PROGRAM, THE RECIPIENT AGREES TO THE FOREGOING.

CONTROLLED COPY
B.NO START - 10 B.NO END - 10

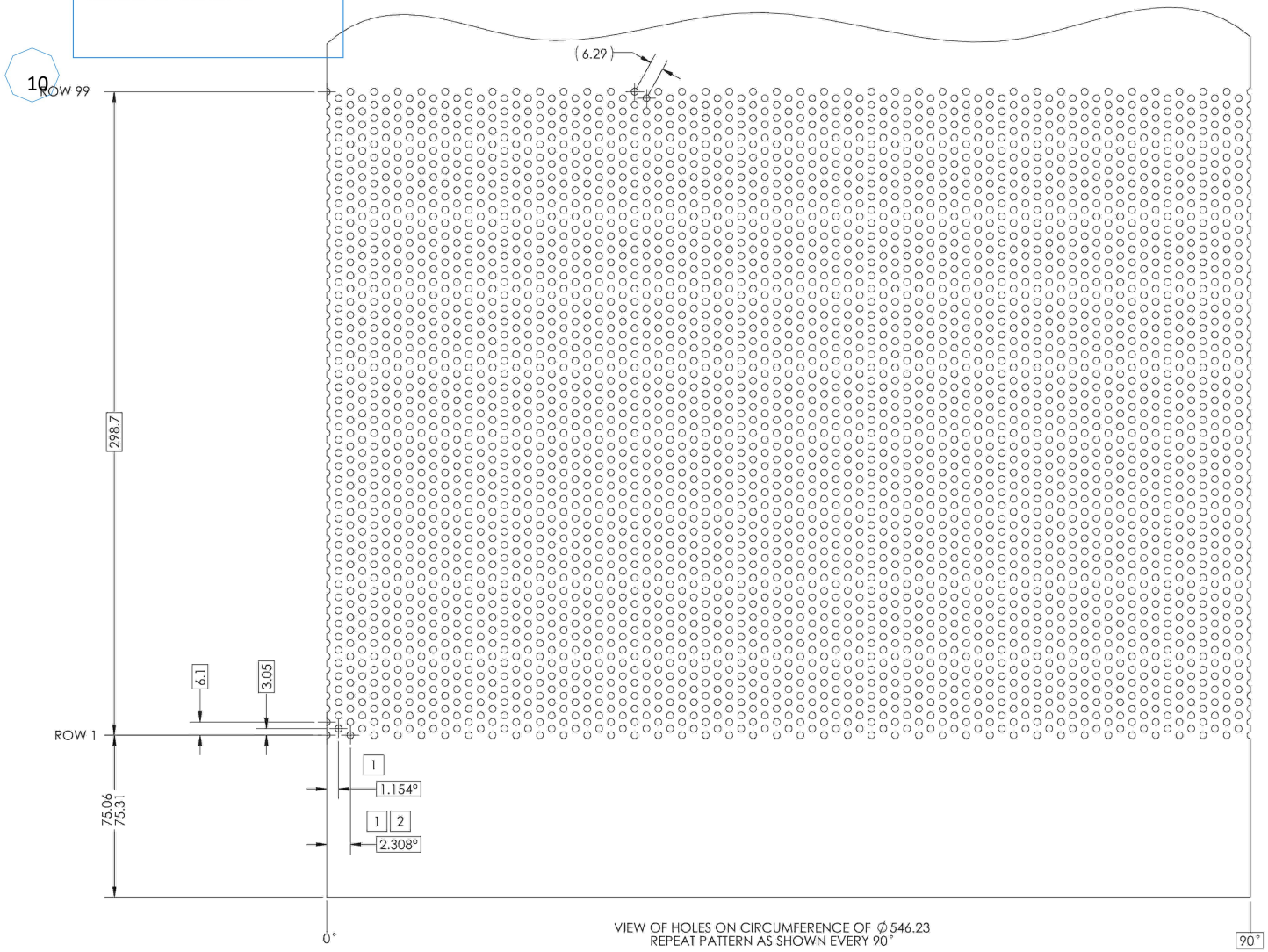

VIEW OF HOLES ON CIRCUMFERENCE OF ∅546.23
REPEAT PATTERN AS SHOWN EVERY 90°

ESTIMATED WEIGHT: 254 KG
FLOW AREA: 1222.8 SQ cm

SURFACES MARKED P REQUIRE PLATING
SURFACES MARKED M REQUIRE MASKING
UNMARKED SURFACES NEED NOT BE MASKED

1 INCREASED/DECREASED ANGLE ALLOWED AT 90° INCREMENTS
2 CHORD LENGTH (11)

TYPE: ET
PROJECT NO.:
UNLESS OTHERWISE SPECIFIED
TOLERANCE ± 0.5 ∠± 3 °
SURFACE FINISH 6.3 Ra
REMOVE SHARP CORNERS AND
BURRS 0.81 RADIUS OR CHAMFER MAX
THREAD DRILL ↧ IS MAX
THREAD LENGTH IS FULL THREAD
THREADED FEATURES PER ASME B1.1-2019
UNITS: MILLIMETERS

CAGE, WHISPER III, LEVEL A1, PLATED, BI DIRECTIONAL
SIZE 20 & 24, CL600, 19.75 PORT, 11.88 TVL

PLATE AS SHOWN 0.051-0.064 THICK
CNTFGL CSTG: 47B6053

© 2023 FISHER CONTROLS INTL. LLC

EMERSON
ECRN:

DWN	Niu, Yunpeng	14 Nov 2023
CHKD	He, Helena	30 Nov 2023
APVD	Faas, Daniel J	11 Dec 2023

ASME Y14.5-2009 SHEET 2 OF 2 REV
GK02877 A